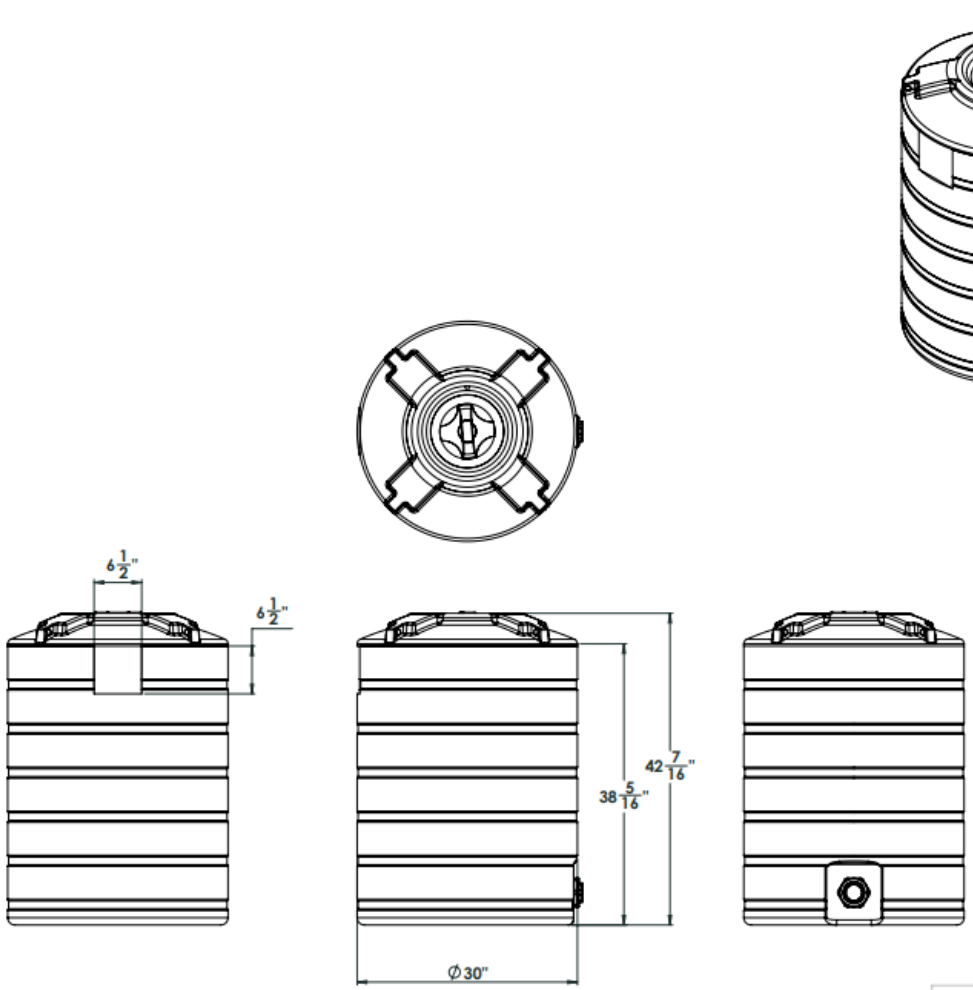

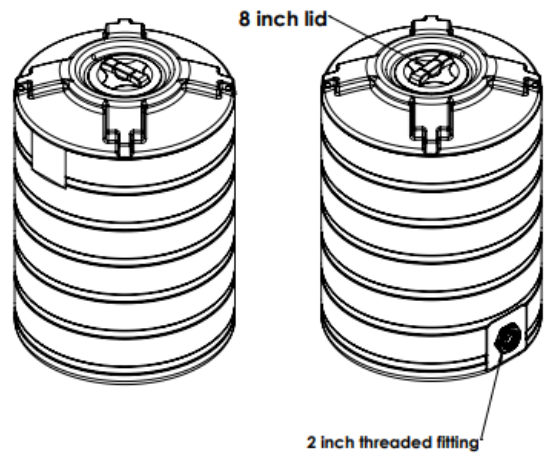

NOTE: Allow +/- 1.5% Shrinkage

		UNLESS OTHERWISE SPECIFIED:		NAME	DATE
		DIMENSIONS ARE IN INCHES	DRAWN	DNS	10/31/14
		TOLERANCES:			
		FRACTIONAL ±	CHECKED		
		ANGULAR: MACH ± BEND ±	ENG APPR.		
		TWO PLACE DECIMAL ±			
		THREE PLACE DECIMAL ±	MFG APPR.		
		INTERPRET GEOMETRIC TOLERANCING PER:	Q.A.		
		MATERIAL	COMMENTS:		
		FINISH			
NEXT ASSY	USED ON				
APPLICATION		DO NOT SCALE DRAWING			

PROPRIETARY AND CONFIDENTIAL

THE INFORMATION CONTAINED IN THIS DRAWING IS THE SOLE PROPERTY OF **ENDURAPLAS LLC**. ANY REPRODUCTION IN PART OR AS A WHOLE WITHOUT THE WRITTEN PERMISSION OF **ENDURAPLAS LLC** IS PROHIBITED.

ENDURAPLAS LLC

TITLE: **TLV00100**

SIZE	DWG. NO.	REV
C		1

SCALE: 1:10 WEIGHT: SHEET 1 OF 1