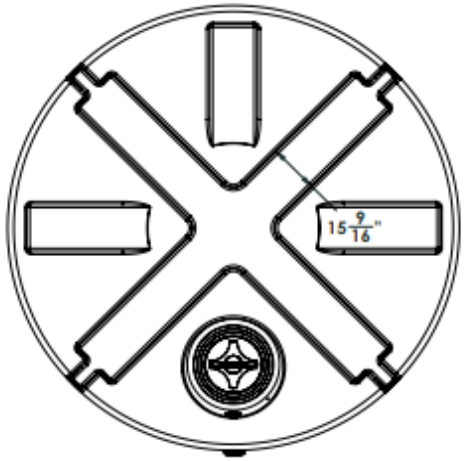

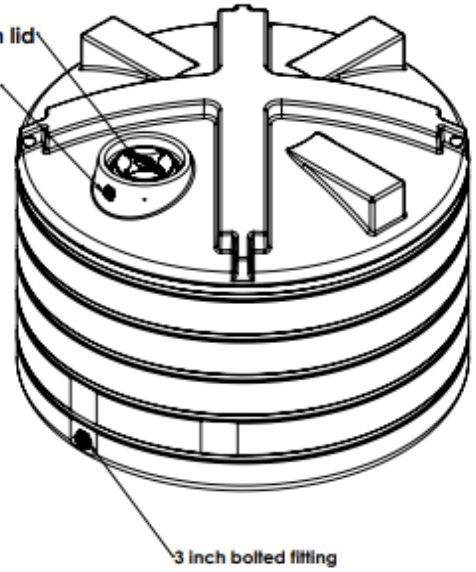

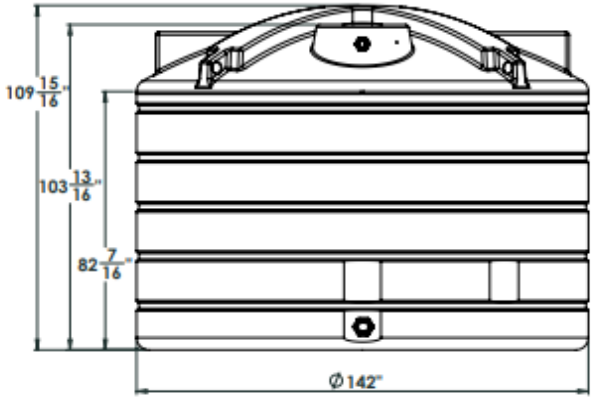

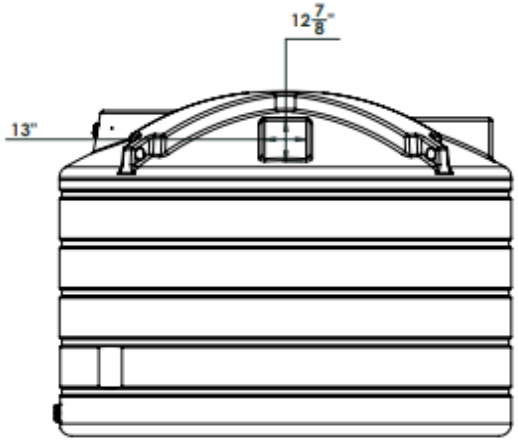

NOTE: Allow +/- 1.5% Shrinkage

		UNLESS OTHERWISE SPECIFIED:		NAME	DATE
		DIMENSIONS ARE IN INCHES	DRAWN	DNS	11/1/14
		TOLERANCES:	CHECKED		
		FRACTIONAL ±	ENG APPR.		
		ANGULAR: MACH ± BEND ±	MFG APPR.		
		TWO PLACE DECIMAL ±	Q.A.		
		THREE PLACE DECIMAL ±	COMMENTS:		
		INTERPRET GEOMETRIC TOLERANCING PER:			
		MATERIAL			
NEXT ASSY	USED ON	Finish			
APPLICATION		DO NOT SCALE DRAWING			

PROPRIETARY AND CONFIDENTIAL
THE INFORMATION CONTAINED IN THIS DRAWING IS THE SOLE PROPERTY OF ENDURAPLAS LLC. ANY REPRODUCTION IN PART OR AS A WHOLE WITHOUT THE WRITTEN PERMISSION OF ENDURAPLAS LLC IS PROHIBITED.

ENDURAPLAS LLC

TITLE: **TLV06011**

SIZE	DWG. NO.	REV
C		1

SCALE: 1:50 WEIGHT: SHEET 1 OF 1