| REVISIONS | | | | |
|---|---|---|---|---|
| ZONE | REV | DESCRIPTION | DATE | APPROVED |
| | C | REDRAWN, SPRGR REV'D | 17AUG04 | |

| REVISIONS | | | | |
|---|---|---|---|---|
| ZONE | REV | DESCRIPTION | DATE | APPROVED |
| | B | REDRAWN, SPRGR REV'D | 22OCT97 | |

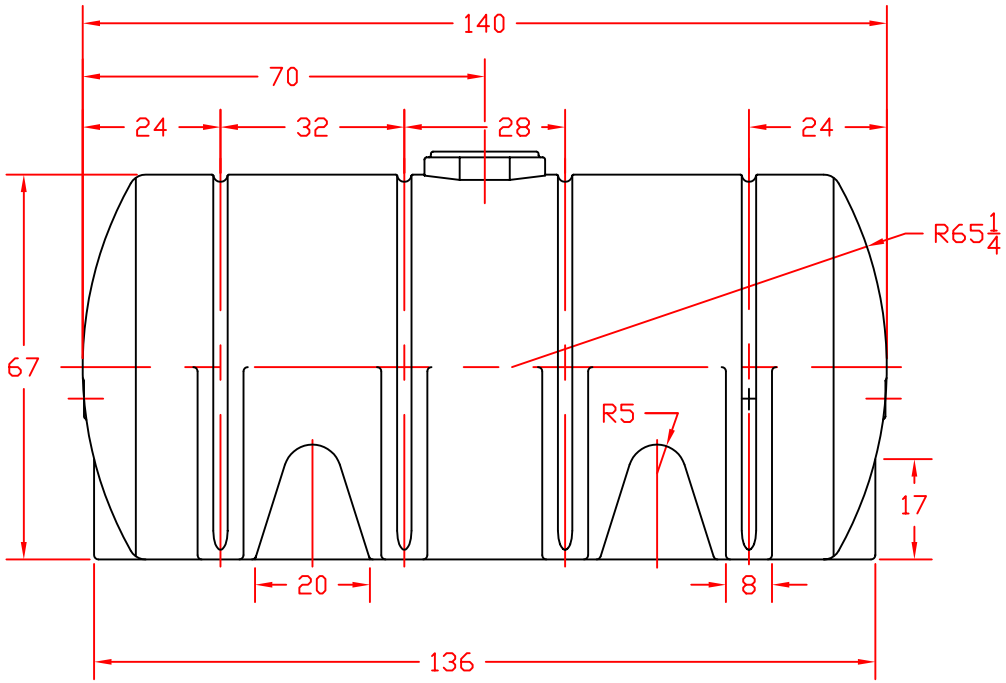


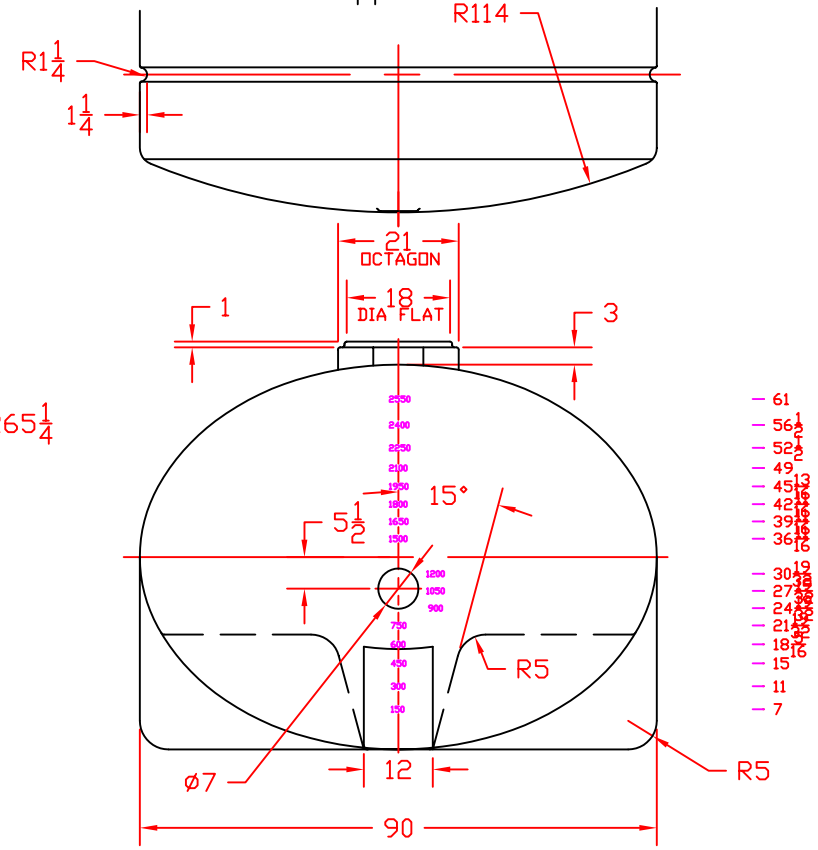


FOB GRIFFIN, GA, LANCASTER, OH, TOOELE, UT & HANFORD, CA

NORWESCO
ST. BONIFACIUS, MN

2635 GALLON ELLIPTICAL HORIZONTAL LEG TANK

| | | | | |
|---|---|---|---|---|
| JTP 22OCT97 | SIZE B | FSCM NO. | DWG NO. | REV C |
| | SCALE 1/24 | | SHEET | |