REVISIONS				
ZONE	REV	DESCRIPTION	DATE	APPROVED
	A	SPARGER FLAT REVSD	04JUN04	
	B	WAS ①② 12 ③ 137 1/2	21NOV07	

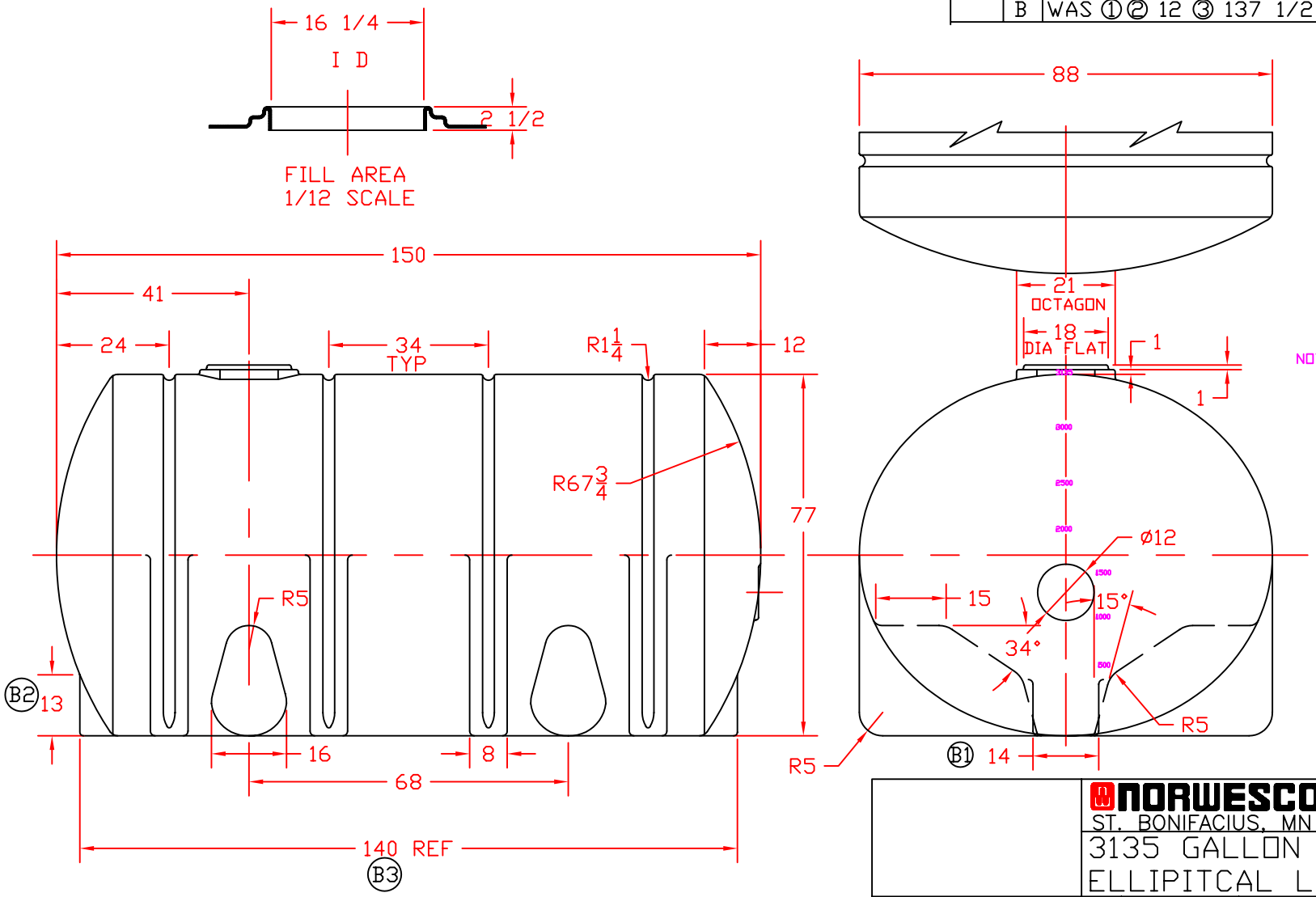

NOTE: GALLON MARKERS ON OPPOSITE END ONLY

- 65 13/16
- 53 29/32
- 44 3/32
- 34 13/16
- 25 13/32
- 15 3/32
- 0

FOB TOOELE, UT AND HANFORD, CA

NORWESCO
ST. BONIFACIUS, MN

3135 GALLON
ELLIPITCAL LEG TANK

JTP 29JUN95	SIZE B	FSCM NO.	DWG NO.	REV A
	SCALE 1/24		SHEET	